HIWIN CONFIDENTIAL
機密文件未經許可，嚴禁複製

LMFA02 Linear Motor

Electrical specifications

	Symbol	Unit	Free air convection	Water cooling
Continuous force	F_c	N	149	297
Continuous current	I_c	A_{rms}	2.7	5.4
Stall force	F_0	N	-	208
Stall current	I_0	A_{rms}	-	3.8
Peak force (1s)	F_p	N	564	
Peak current (1s)	I_p	A_{rms}	16.7	
Force constant	K_f	N/A_{rms}	55.1	
Attraction force	F_a	N	914	
Max. winding tempurature	T_{max}	℃	120	
Electrical time constant	K_e	ms	7.2	
Resistance (line to line ， 25℃)	R_{25}	Ω	5.9	
Resistance (line to line，120℃)	R_{120}	Ω	7.7	
Inductance (line to line)	L	mH	42.1	
Pole pair pitch	2τ	mm	30	
Back emf constant(line to line)	K_v	V_{rms}/(m/s)	31.8	
Motor constant (25℃)	K_m	N/√W	18.6	
Thermal resistance	R_{th}	℃/W	1.13	0.28
Thermal time constant	t_{th}	s	-	150
Thermal switch			1 x Pt1000 + 1 x (3 PTC SNM 120 In Series)	
Maximum velocity at maximum force	$V_{MAX,FP}$	m/s	5.39	
Maximum electric power input	$P_{EL,MAX}$	W	-	6280
Maximum dissipated heat output	$Q_{P,H,MAX}$	W	-	337
Max. DC bus voltage		V_{DC}	750	

Mechanical specifications

	Symbol	Unit	Free air convection	Water cooling
Mass of forcer	M_f	kg	2.3	
Unit mass of stator	M_S	kg	3.7	
Total installation height	H	mm	48.5	
Minimum flow rate		L/min	-	3.3
Temperature of cooling water		℃	-	20
Pressure drop	△P	bar	-	0.82
Water temperture difference	$\triangle\theta_{P,H}$	K	-	1.5

Lf	mm	250	Wf3	mm	55
Lf1	mm	157.5	Wf4	mm	33.75
Wf	mm	67	Wf5	mm	14.4
Wf1	mm	18.5	N	mm	4
Wf2	mm	30	n	mm	-

F-V curve

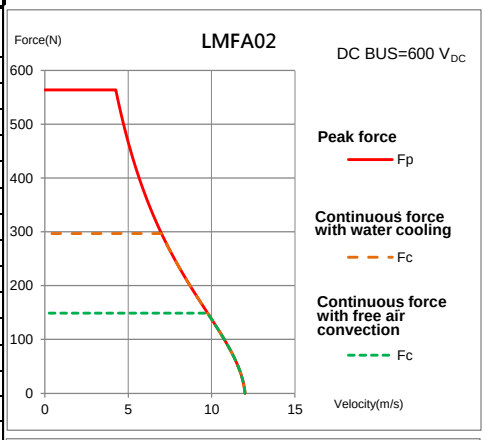

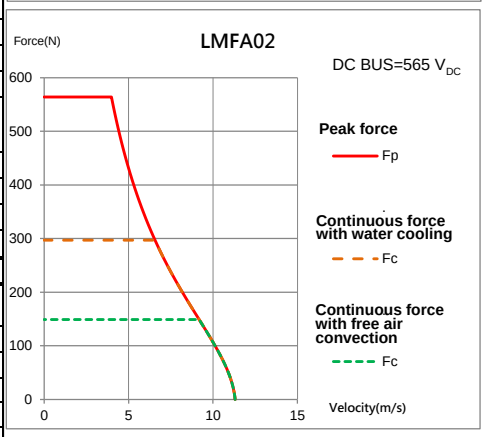

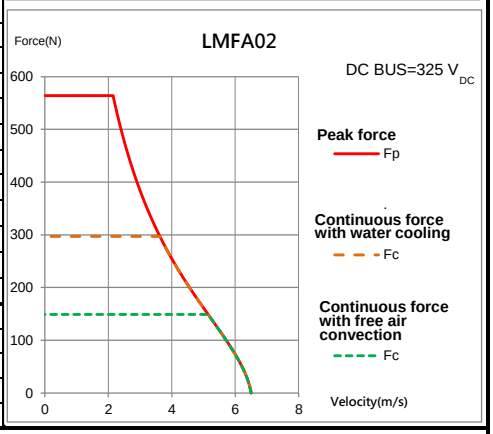

Focer dimensions

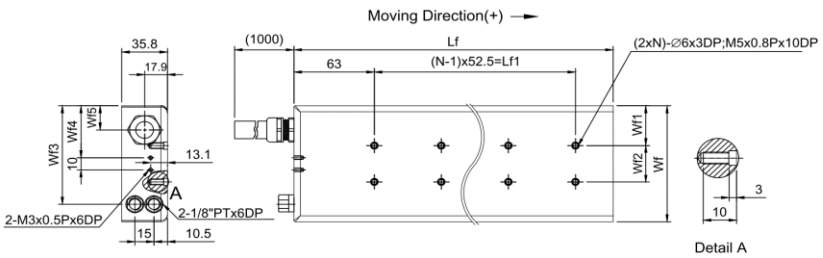

Mounting tolerance

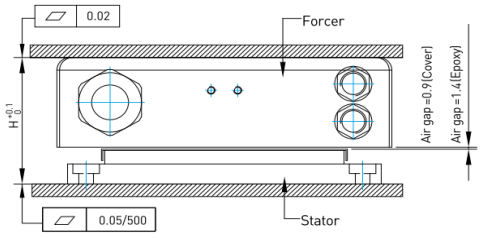

Stator dimensions

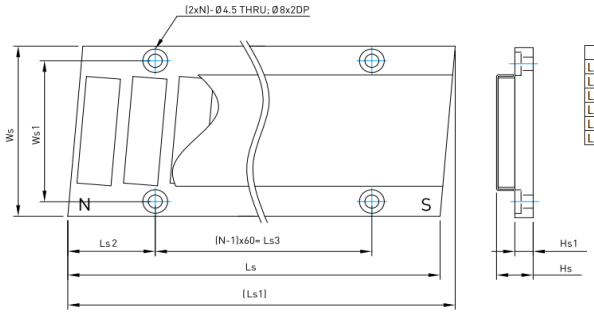

Type	Ls	Ls1	Ls2	Ls3	Hs	Hs1	Ws	Ws1	N
LMF0S1	120	124.87	31.25	60	11.8	5.9	58	48	2
LMF0S1E	120	124.87	31.25	60	11.3	5.7	58	48	2
LMF0S2	180	184.87	31.25	120	11.8	5.9	58	48	3
LMF0S2E	180	184.87	31.25	120	11.3	5.7	58	48	3
LMF0S3	300	304.87	31.25	240	11.8	5.9	58	48	5
LMF0S3E	300	304.87	31.25	240	11.3	5.7	58	48	5

Except dimensions, all the specifications in the table are in ±10% of tolerance

Version: 2.00

Date: 2020/5/8