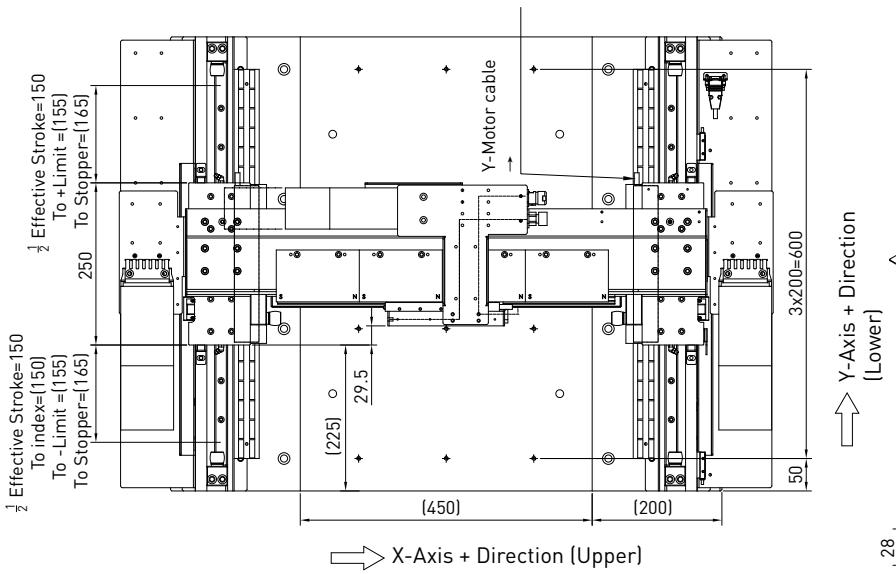

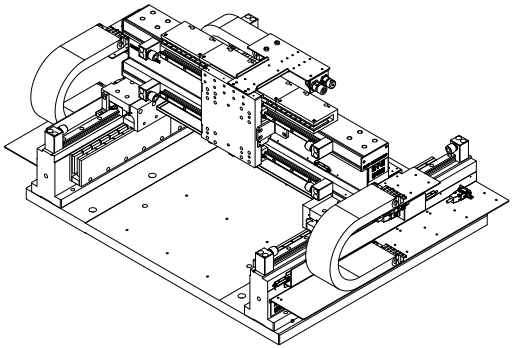

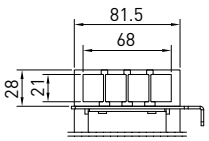

View B (Cable inlet)
Y2-axis Cable Chain type:
(Y1 = Y2)
1400.068.075.0
21.1*3 per 2 elements

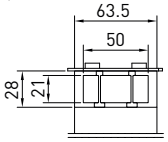

View A (Cable inlet)
X-axis Cable Chain type :
1400.050.048.0
21.1*2 per 2 elements

X-Axis Motor wiring diagram		
Signal	Color (CF10.05.05)	8-10-0104 Male
U	Brown	1
V	White	4
W	Grey	3
GND	Shield	Case
T+	Yellow	5
T-	Green	6

Y-Axis Motor wiring diagram		
Signal	Color (CF10.07.05)	8-10-0104 Male
U	Black-2	1
V	Black-1	4
W	Black-3	3
GND	Shield	Case
T+	Black-4	5
T-	Yellow/Green	6

Positioning Measurement-Absolute(BiSS-C)			
Function	Signal	Color	8-10-0089 Male
Power	5V	Brown	4
			5
	0V	White	12
		Green	13
Clock	MA+	Violet	7
	MA-	Yellow	6
Data	SLO+	Grey	11
	SLO-	Pink	3
Outer Shield	Shield	-	Case

Limit switch wiring diagram		
Signal	Color	D-Sub Male-9P
2-A	Black	1
-	Blue	2
		3
		4
		5
+	Brown	6
1-A	Black	7
		8
		9

StageType	LMG3A-CB5-2CEFE4-300-300-X10C
Motor Type	X-axis(upper) : LMCB5 ; Y-axis(lower) : LMCEFE4
Stroke (mm)	X-axis(upper) : 300 ; Y-axis(lower) : 300
Repeatability (μm)	X-axis : ± 1 ; Y-axis : ± 1 (with HIWIN solution)
Accuracy (μm)	X-axis : ± 3 ; Y-axis : ± 3 (with error-mapping)
Max. Velocity (m/s)	X-axis : 0.5 ; Y-axis : 0.5 (with payload)
Max. Acceleration(m/s^2)	X-axis : 5 ; Y-axis : 5 (with payload)
Linear Encoder	Absolute, BiSS 26 bit , 50nm, EL26BBB050FxxA
Linear Scale	RTLA50-S
Vertical Straightness (μm)	± 10 / 300 mm
Horizontal Straightness (μm)	± 10 / 300 mm
Yaw (arc-sec)	± 10 / 300 mm
Pitch (arc-sec)	± 10 / 300 mm
Orthogonality (arc-sec)	10 (200x200mm central stroke)
Limit Switches	Wenglor Inductive PNP (NC) , I1BH009
Moving Slide	Aluminum with black anodized finish
Stationary Base	Aluminum with black anodized finish
Payload (kg)	10
Moving Mass (kg)	X-axis : (5) ; Y-axis : (40)
Stage Weight (kg)	(150)
Grease Type	HIWIN G04 (for normal environment)
Input voltage(V)	220
Drive architecture	X-axis : Single; Y-axis : Dual
Drive Type	HIWIN ED1 recommended
Stage orientation	Horizontal

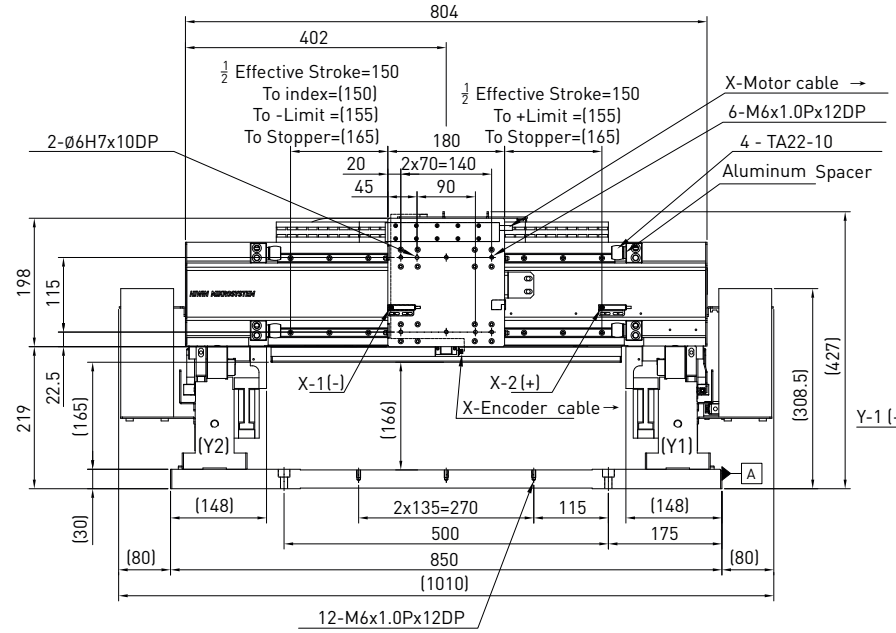

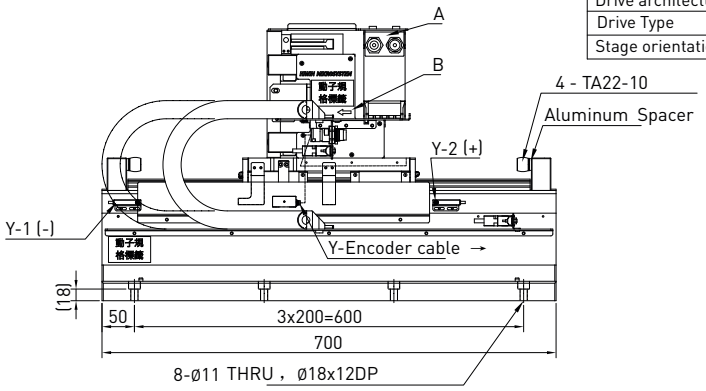

HIWIN MIKROSYSTEM CORP.															
												TYPE	LM	ROBOTS (Dual Gantry)	
												CUSTOMER	H-GERMANY	DATE	Apr.27.23
ROUGH ▽		FIT ▽▽		GRD ▽▽▽						SCALE		MATERIAL	\	DWN	顏靜涵
8.0a		3.2a		0.8a						1:X		FINISH	\ \	CHK	黃鈺婷
TOLERANCE mm												PART NO	FM22M2343100	APPD	張家榮
UP TO	6 4	30	120	120 300	300 600	600 1200	1200 2400	OVER 2400				NAME	DWG NO		SHEET
± 0.1	± 0.2	± 0.3	± 0.4	± 0.5	± 0.8	±1.0	± 1.5					APPROVAL	M23431	A4	1-1